TRADING PARTNER FORUM

Pre-Despatch Checklist

Common requirements for all deliveries into Woolworths, Coles & Metcash DCs

Date of Despatch:

PO Number:

Number of Pallets:

Checked By:

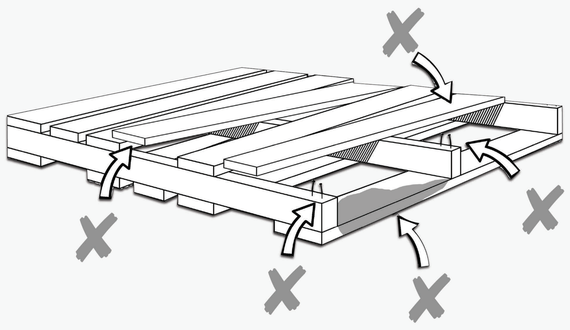

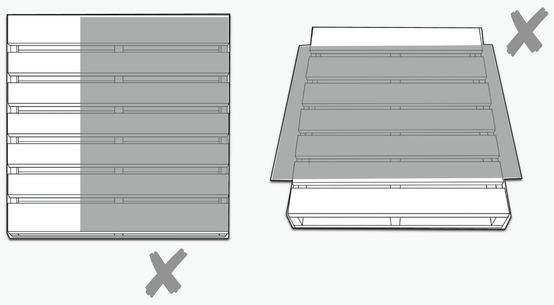

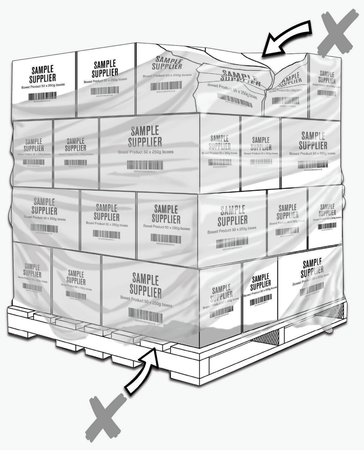

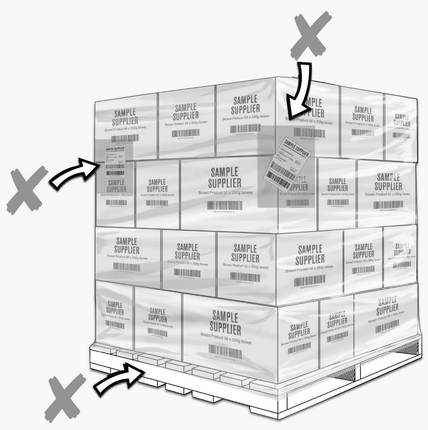

Pallet Checks

	Yes	No	Fixed (initial)
All boards and bearers are within tolerances of pallet quality specifications			
Lead boards are square with bearer, or at no greater than 15mm pushback?			
All stock is centred on the pallets and no product or slipsheets overhang the pallet edge			
All pallets are wrapped securely with sufficient passes to maintain load stability in transit			
Stretch wrap is securely bound to the top 30-50% of the wooden pallet			
Stretch wrap is applied neatly, with no "tails" or "dags" at risk of becoming loose			
No loose sheets of paper have been placed between wrap and product			

Carton Checks

	Yes	No	Fixed (initial)
GTIN barcodes are visible on fork-entry sides of the pallet (for at least some cartons)			
No cartons are damaged, crushed, leaking, moisture-affected or spilling product			

SSCC Label Checks

	Yes	No	Fixed (initial)
SSCC labels are in place on both of the pallet's fork-entry sides			
SSCC labels are on the right hand side of the pallet face, at 400-800mm from ground level			
Both SSCC labels - on the front and back fork-entry sides of each pallet - are identical			
Both SSCC labels on each pallet match the actual product contained within that pallet			
Both SSCC labels are clearly visible, are not wrinkled, damaged, dirty or poorly printed			

All items marked 'No' must be corrected pre-despatch

Checked By Team Leader:

Other Issues Identified:

NOTE: this document is intended as a support tool only. Suppliers should note that:

- **The following guidance is not exhaustive** and Suppliers should reference Retailer guidelines where more-detailed information on requirements is appropriate.
- **Chain of Responsibility (CoR) requirements are paramount and the advice here is subordinate to any CoR outcomes and obligations.** Suppliers should discuss any potential CoR issues with trading partners prior to adopting the advice above.

Proudly developed and endorsed by:

AUSTRALIAN FOOD & GROCERY COUNCIL

WOOLWORTHS GROUP

coles

Metcash